Modeling and Simulation of Sensor-to-Sink Data Transport Reliability in WSNs

FAISAL KARIM SHAIKH*, SHEERAZ MEMON**, AND JAVED AHMED BALOCH**

RECEIVED ON 10.09.2011 ACCEPTED ON 01.12.2011

ABSTRACT

The fundamental functionality of WSN (Wireless Sensor Networks) is to transport data from sensor nodes to the sink. To increase the fault tolerance, inherent sensor node redundancy in WSN can be exploited but the reliability guarantees are not ensured. The data transport process in WSN is devised as a set of operations on raw data generated in response to user requirements. The different operations filter the raw data to rationalize the reliable transport. Accordingly, we provide reliability models for various data transport semantics. In this paper we argue for the effectiveness of the proposed reliability models by comparing analytically and via simulations in TOSSIM.

Key Words: Data Transport, Reliability Block Diagrams, Wireless Sensor Networks, Modeling.

1. INTRODUCTION

WSN) covers a wide range of applications and becoming an emergent research area. Representative WSN applications include environmental monitoring, Intelligent Transportation Systems, disaster management and target detection. In all scenarios the core obligation is to gather data from the environment and transport it to the application via a sink. The general data collection and transport involves the flow of the raw data from source nodes towards the sink.

Generally, a WSN consists of many sensor nodes having limited power and processing capacity. Also the sensor nodes frequently communicate over low bandwidth and unreliable links [1]. Often, the applications are concerned in detecting a phenomenon of interest (such as target tracking, fire detection etc.) with an certain quality. Thus, the desired data transport reliability varies for diverse applications.

To report the phenomenon of interest, one potential solution is to flood the raw data towards the sink. Allowing all the raw data to flow may results in more failures (i.e., contention and collision etc.). It is well established in WSN that in-network processing lessen the redundancy of data [2], causing less collisions, reduces the contention and enhances the responsiveness.

Let us consider a scenario where the application is interested in detecting and reporting of events, e.g., fire. We assume that more than one sensor node detects the event and send the ”alarm” message to its neighbors. Upon receiving a certain number of ”alarm” messages (e.g., two), the sensor nodes transports ”alarm” message to the sink. Subsequently, if the in- network operation is unreliable and ”alarm” messages are lost, the application performance will degrade. Similarly, if the in-network process is

* Assistant Professor, Department of Telecommunication Engineering, Mehran University of Engineering & Technology, Jamshoro.
** Assistant Professor, Department of Computer Systems Engineering, Mehran University of Engineering & Technology, Jamshoro.

dependable but its transport is unreliable the application performance is on stack again. Thus, for reliability modeling all the operations on raw data need to considered.

This paper targets the following specific objectives. In order to fulfill WSN reliability requirement despite of failures, we first develop data transport and the reliability semantics. based on these semantics we propose a detailed scheme for modeling the data transport along with their operational phases and modules. We map and validate the existing data transport protocols to our proposed reliability models via simulations.

The rest of the paper is structured as follows. Related work is presented in Section 2. Different data transport and reliability semantics are discussed in Section 3. The proposed reliability models are presented in Section 4. Section 5 provides the numerical analysis of the models and their simulation verification. The conclusions and future directions appear in Section 6.

2. RELATED WORK

There is a small number of works exist for modeling data transport reliability in WSN. In [3], only the reliability of sensor node is modeled. Markov chain model is used to present the system reliability for different types of sensors. As only sensor reliability is modeled, this work is complementary to ours. Whereas, in [4, 5] clustered WSNs are considered and their reliability modeling is carried out. In [4] an end-to-end connectivity based reliability is presented. The authors in [5] extended this approach by combining the coverage reliability of sensor nodes. Since, these approaches consider only connectivity and sensing of sensor nodes, they are limited from the data transport perspective. The authors in [6] also modeled the reliability of WSN in terms of mean time to failure and do not consider data transport. In [7], the authors provides a limited approach to model data transport in WSN. In this paper we extend the idea and also verify it using the simulations.

From the discussion above we conclude that there is a need great need for modeling the data transport reliability in WSN.

Despite less efforts for modeling the data transport reliability, an extensive research is carried out for reliable data transport protocols in WSN [1, 8-15]. RMST (Reliable Multi-Segment Transport) [9] jointly uses selective NACK (Negative Acknowledgment) and timer-driven mechanisms for loss detection and notification. It places responsibility for message loss detection at the receivers (which can be intermediate nodes as well as the sink). RMST also does not exploit the spatial redundancy inside the network and propose retransmissions at the MAC and transport layers. In [16], the authors present ESRT (Event to Sink Reliable Transport) protocol that achieves reliability by adjusting the reporting rate of sensor nodes depending upon current network load. ESRT is developed for continuous event services, where an adaptation of the data report rate makes sense. Our work provides reliability at the hop level whereas, ESRT provide end to end reliability which is difficult to maintain in WSN. The RBC (Reliable Bursty Convergcast) [17] protocol provides information transport reliability through hop-by-hop retransmission-based loss recovery. The RBC reliability design is based on a windowless block ACK (Acknowledgment) and Implicit ACK along with fixed number of retransmissions to cope with the perturbations.

3. SEMANTICS

On this background, we survey the existing data transport semantics and propose our generalized semantic along with the reliability semantic.

3.1 Data Transport Semantics

First we describe the known data transport semantics and highlight their limitations. Accordingly, we define our general- ized data transport semantic.

3.1.1 Existing Semantics

A prominent data transport semantic in WSN is e2e (end-to-end) data delivery. In e2e each sensor node is responsible to transport the data towards the sink. The main objective of e2e DT protocols is to efficiently maximize the responsiveness. To achieve these objectives the protocols have to mitigate packet loss and network congestion. For packet loss, retransmission strategies are used and for network congestion appropriate congestion control mechanisms are deployed. The e2e semantic is not much appropriate due to the data-centric nature of WSNs [8].

Another commonly used semantic is ev2s (event-to-sink) [8,14-15]. In ev2s many sensor nodes report the phenomenon of interest to the sink. This semantic considers multiple nodes reporting the event to the sink. Each node that detects the event is responsible for sending the data to the sink. The ev2s is shown to be more appropriate than the e2e semantic for WSNs [8], however in-network data processing is not considered by the ev2s.

3.1.2 Generalized Semantic

We define the data transport as the series of operations performed on the raw data generated due to some phenomenon of interest until it is reported to the sink.

3.2 Reliability Semantic

For e2e the reliability metric is the probability of reaching the generated data to the sink. For ev2s the reliability metric is the ratio of total number of messages generated for an event to the messages received at the sink. Thus, the data transport reliability is a product of reliabilities of different operations executed on the raw data.

4. DATA TRANSPORT RELIABILITY

In this section, we first emphasis on the adopted modeling approach. Next, we develop the models for reliable data transport in WSNs. In last, we provide classification of existing data transport protocols in order to compare our models using simulations.

4.1 The Modeling Approach

For reliability analysis various formalisms are available. Some models focus on particular level of abstraction and some on different system characteristics. Markov Models, Fault Trees, and RBDs (Reliability Block Diagrams) are commonly used to express and enhance the system reliability. Markov chain method is comprehensive and allows explicit modeling of multifaceted relationships, resulting in very complex models. Contrary, RBD and Fault Tree models enumerate only essential system states to find a solution and uses simpler approaches to calculate system reliability. The fault trees are mainly used to model the faulty states of the system whereas, RBDs are used to model the reliability of the system. Since, WSN consists of hundreds and thousands of sensor nodes we entail a modeling mechanism which is simple and can work at abstract level. Accordingly, we use RBDs for its simplicity compared to Markov chain model where the state space become large with the increase of components in the system. Generally, the state space explosion problem often makes the solution of the Markov chain intractable and sometimes makes it impossible. Thus, RBD becomes a good choice to model the data transport reliability [7].

4.2 Modeling Data Transport Reliability

Using RBDs, the reliability of data transport is represented as series combination of reliability of all operations. Since, if any operations fails the overall data transport task will fail [7]. Fig. 1 shows the resulting RBD for data transport in WSNs.

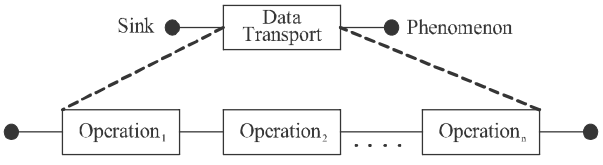

FIG. 1. RBD FOR DATA TRANSPORT IN WSN [7]

The reliability of data transport R_{Ψ} is calculated as follows:

$$R_{\Psi} = R_{\theta_1}, R_{\theta_2} \cdot \ldots \cdot R_{\theta_n} = \prod_{i=1}^{n} R_{\theta_i}$$

where $R_{\theta i}$ is the reliability of ith operation.

Generally, the operations carried on raw data are detecting phenomenon of interest, routing and MLD (Message Loss Detection). The routing operation is viewed as transferring the messages from source nodes across different hops towards the sink. On the other hand, MLD is used for a reliable delivery by first detecting a missing message and then recover the message by retransmission. There are multiple MLD techniques available in literature such as ACK, Selective ACK, Negative ACK and timers. In this paper, we assume that the detection operation at sensor node to detect the phenomenon of interest has reliability R_{Φ}.

Let us start considering a single node sending data towards the sink across several hops as shown in Fig. 2. Thus the reliability $R_{\Psi 1}$ is calculated as follows:

$$R_{\Psi_1} = R_{\Phi} \cdot \prod_{\forall h} H_R \quad (1)$$

where H^R is hop reliability. Equation (1) represents a simple routing of data from source node to the sink. In case of failures (which are norm in WSNs) along the path the data may lost. Subsequently, MLD techniques are used to enhance the reliability of data transport. The sensor nodes upon detecting a data loss using techniques discussed above, retransmit the data across the hops. If one of the retransmission is lost the whole data transport is not failed. This effect is shown by having MLD block in series with hop reliability block as shown in Fig. 3. Accordingly, the reliability can be obtained as follows

$$R_{\Psi_m} = R_{\Phi} \cdot \left\langle 1 - \left\{ \left(1 - \prod_{\forall h} H_R \right) * \left(1 - \prod_{\forall h} \left(H_R * R_{MLD} \right) \right)^T \right\} \right\rangle \quad (2)$$

When an event occurs, generally a set of source nodes n send data towards the sink. The failure of reporting of one of source node will not result in failure of data transport. Using RBD, this is shown as parallel combination in Fig. 4 given as:

$$R_{\Psi_n} = R_{\Phi} \cdot \left\{ 1 - \left[\left(1 - \prod_{\forall h} H_R \right) \right]^n \right\} \quad (3)$$

Subsequently, the generalize data transport in WSN refers to many nodes sending the data towards the sink and to enhance the reliability MLD techniques are used along the path. The generalized RBD is shown in Fig. 5 and the reliability of generalized data transport $R_{\Psi G}$ is calculated as follows:

$$R_{\Psi_G} = R_{\Phi} \cdot \left\langle 1 - \left(1 - \left[1 - \left\{ \left(1 - \prod_{\forall h} H_R \right) * \left(1 - \prod_{\forall h} \left(H_R * R_{MLD} \right) \right)^T \right\} \right] \right)^n \right\rangle \quad (4)$$

H_R, R_{MLD} and *h* depend upon WSN properties i.e. number of nodes, network conditions etc.

4.3 Classification of Existing Data Transport Protocols

In order to validate the reliability of proposed models we map and classify the existing data transport protocols.

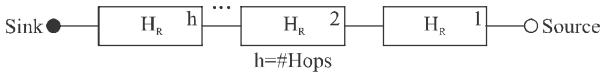

FIG. 2. RBD FOR SINGLE SOURCE WITHOUT MLD

FIG. 3. RBD FOR SINGLE SOURCE WITH MLD

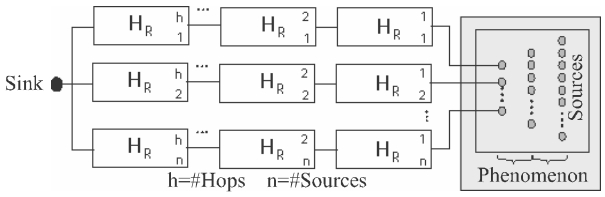

FIG. 4. RBD FOR N SOURCES REPORTING AN EVENT

Accordingly, the operations performed by the protocols are first investigated and then mapped to the analytical models. We classify the existing protocols according to the considered semantics in Section 3.1, i.e. e2e, ev2s and generalized. Many e2e protocols are available in literature [9,12,18]. For e2e protocols the reliability is mainly ensured by retransmitting the missing data. However, e2e protocols vary mainly in retransmission polices and strategies for MLD. Therefore, modeling the data transport reliability of e2e protocols is similar. Accordingly, we opt one representative protocol from this class, i.e., RMST protocol [9]. The analytical model presented by Equation (2) captures the reliability of data transport using MLD and data transfer across the hops and is mapped easily with the e2e class. For ev2s class, noticeably one protocol is available [19], i.e. the ESRT [8]. Equation (3) represents the case where many sensor nodes transport the data towards the sink via multi-hoping across several hops and is mapped to ev2s class. Similarly, for generalized class one important protocol is identified [19], namely the RBC protocol [14]. RBC uses the reliability mechanisms from the e2e semantic on top of the ev2s semantic. Since, Equation (4) super impose the characteristics of Equation (3) and Equation (2), similar to RBC, it is mapped to generalized class. Table 1 summarizes the classification and the mapping of reliability models.

5. NUMERICAL ANALYSIS AND SIMULATION VERIFICATION

After modeling the data transport reliability and classifying the existing protocols, we now explore numerically and verify the results using simulations. We investigate the impact of number of hops, i.e. the route length, on the reliability of the protocols.

5.1 Numerical Results

Fig. 6 compares the reliability of three data transport models for n=4 and r=3. The reliability across the hops and MLD is considered equal because relatively when the reliability is high between the hops, detecting a data loss is also high compared to when the reliability is low across the hops, the message loss detection methods may also fail. We considered $H_R=R_{MLD}=0.9$ for Ψ_m and Ψ_G reliability models because they include MLD. Whereas, for Ψ_m we have used $H_R=R_{MLD}=0.8$ to reflect more failures.

TABLE 1. PROTOCOL CLASSIFICATION AND ANALYTICAL MODEL MAPPING

Protocol	Semantic	Operation	Reliability Model
RMST	e2e	Routing, MLD	$R_{\Psi G}$ (Equation 2)
ESRT	ev2s	Routing	$R_{\Psi n}$ (Equation 3)
RBC	Hybrid	Routing, MLD	$R_{\Psi G}$ (Equation 4)

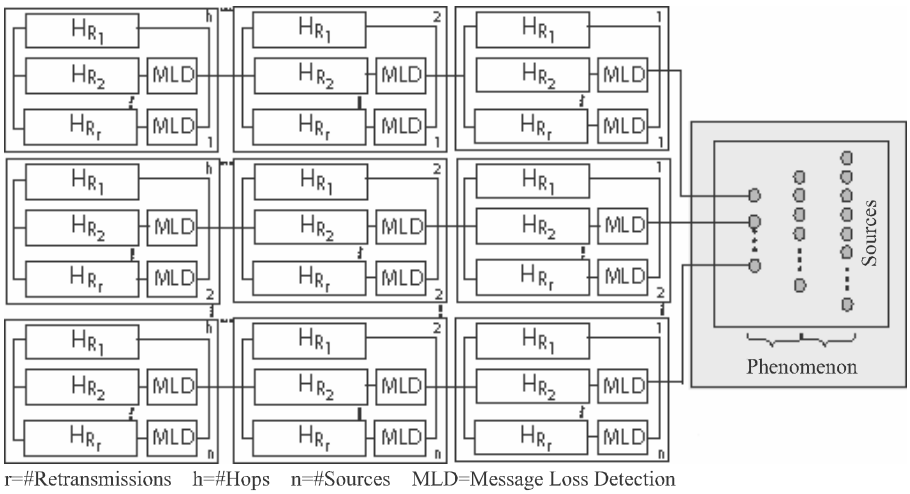

FIG. 5. RBD FOR GENERALIZED DATA TRANSPORT

The comparison is given for various path length of 1,2, ...,10. We observe that as the path length increases the reliability decreases. Especially the model using Equation (3) show a quick drop in reliability since, it only rely on number of nodes reporting the event and there is no MLD mechanism available. The generalized data transport model (Equation (4)) shows a stable behavior for long paths (8 hops). But as the path is further increased, the generalized data transport model also tends to provide lower reliability.

To enhance the reliability, online adaptation can be accomplished by tuning different parameters. For example considering Equation (4), H_R and R_{MLD} imitate network conditions (which can be affected by perturbation), whereas n and r are protocol defined parameters which can be tuned based on application reliability requirements. If R_R or R_{MLD} decreases, n or r can be tuned appropriately so that the required degree of reliability is maintained.

The analytical results are in harmony with the results in the literature [20,7,21], highlighting the usefulness of our models for comparison, evaluation of existing and future data transport protocols.

5.2 Simulation Results

In this section, we first present the simulation settings and then provide the evaluation of classified protocols to verify the proposed models.

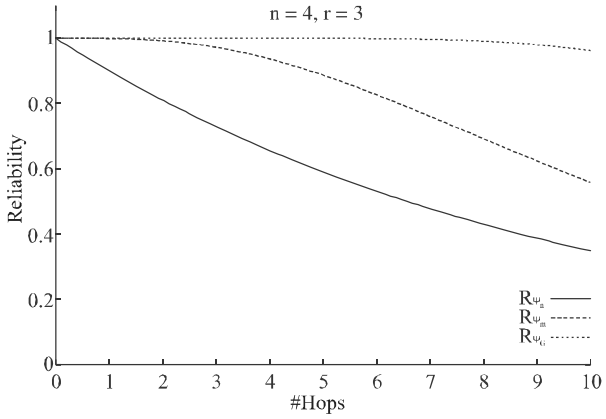

FIG. 6. ANALYTICAL ANALYSIS OF RELIABILITY

5.2.1 Simulation Settings

We compare the selected data transport protocols using TOSSIM simulator [22]. The sensor nodes use empirical radio vprovided by TOSSIM for communication purpose. As RBC [17] uses LGR (Logical Grid Routing) [23] protocol for routing the data, we also selected LGR. The RBC code for mica2 sensor node is available. We ported it for TOSSIM simulator. Since, the source code for e2e protocols and ESRT [16] is not available for TOSSIM, we developed SKE protocol and ESRT respectively for e2e and ev2s classes. The topology used for simulations is n x n grid. The sink is positioned at the upper left corner of the grid. For ESRT and RBC "s" nodes (geographically close to each other) from opposite corner of the grid generate and transport the event message to the sink. For SKE a single node sends data to the sink. The distance across two nodes is called as cell size and we set it to 7.5 feet for high reliability between the hops [19]. We have simulated various numbers of nodes, i.e. 25(5x5), 36(6x6), ...,100(10x10). Since, the event is generated in one corner of the grid area, it provides sufficient number of hops for data to travel. Thus, on average we get 5,6, ...,10 hop distance for 5x5, 6x6, ..., 10x10 grid topologies.

5.2.2 Evaluation

Fig. 7 shows the reliability of the selected protocols for various number of hops (based on grid topologies). It is observed that as the number of hops increase, the reliability tends to decrease and no protocol shows 100% reliability. This is because of the fact that as the route length increases, the impact of perturbations also increases. However, the reliability of RBC remains always higher than ESRT and SKE which is also evident from the numerical analysis because it implements MLD as well as many sources are sending the data. The reliability of ESRT is decreasing progressively as the number of hops to traverse increases because no MLD technique is implemented by the ESRT.

It can be observed that our analytical results match closely the TOSSIM simulation results. Note that there are marginal differences for a reliability when the path length is below 5 hops. The debug logs generated by TOSSIM, reveals that for less number of hops the provided radio model can communicate directly to the sink for cell size 7.5. The fine grained radio models and other practical issues are not considered in our reliability models.

6. CONCLUSIONS

In this paper, we proposed various data transport reliability models and mapped them to existing data transport protocols for WSN. Accordingly, the RBD based approach is developed for modeling the data transport. The RBD approach decom- poses the complex problem of data transport into various operations and simplifies the investigation of the data transport reliability. Finally, the mathematical analysis is also verified by simulation using TOSSIM.

In the future, we will focus on how to extend the models for timeliness requirement and to extend them for mobile WSNs.

ACKNOWLEDGMENTS

This research is supported in parts by Mehran University of Engineering & Technology, Jamshoro, Pakistan, and DEEDS, TUD Germany. The authors are thankful to Dr. Khelil and Prof. Dr. Suri, for fruitful discussions.

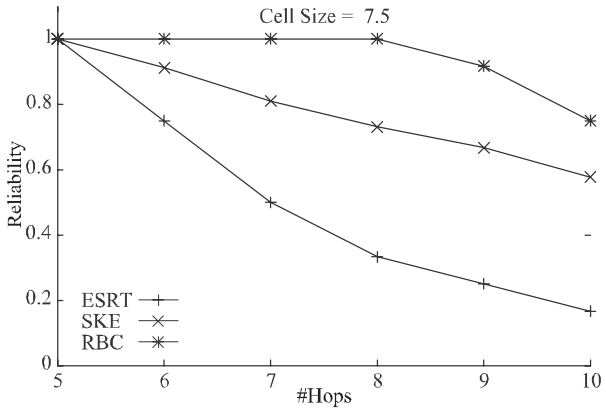

FIG. 7. SIMULATION STUDY OF THE RELIABILITY

REFERENCES

[1] Akyildiz, I.F., Su, W., Sankarasubramaniam, Y., and Cayirci, E., "Computer Networks", Volume 38, No. 4, pp. 393-422, 2002.

[2] Madden, S., Franklin, M.J., Hellerstein, J.M., and Hong, Tag, W., "A Tiny Aggregation Service for Ad-Hoc Sensor Networks", Proceedings of Symposium on Operating Systems Design and Implementation, pp. 131-146, 2002.

[3] Bein, D., Jolly, V., Kumar, B., and Latifi, S., "Reliability Modeling in WSNs", International Journal of Information Technology, Volume 11, No. 2, pp. 1-8, 2005.

[4] AboElFotoh, H.M.F., Iyengar, S.S., and Chakrabarty, K., "Computing Reliability and Message Delay for Cooperative Wireless Distributed Sensor Networks Subect to Random Failres", IEEE Transactions on Reliability, Volume 54, No. 1, pp. 145-155, 2005.

[5] Xing, L., and Shrestha, A., "QoS Reliability of Hierarchical Clustered Wireless Sensor Networks", Proceedings of International Performance, Computing, and Communications Conference, pp. 641-646, 2006.

[6] Munir, A., and Gordon-Ross, A., "Markov Modeling of Fault-Tolerant Wireless Sensor Networks", Proceedings of IEEE International Conference on Computer Communications and Networks, 2011.

[7] Shaikh, F.K., Khelil, A., and Suri, N., "On Modeling the Reliability of Data Transport in Wireless Sensor Networks", Proceedings of The Fifteen Euromicro Conference on Parallel, Distributed and Network-Based Processing, pp. 395-402, 2007.

[8] Sankarasubramaniam, Y., Akan, O¨.B., and Akyildiz, I.F., "ESRT: Event-to-Sink Reliable Transport in Wireless Sensor Networks", Proceedings of Interational Symposium on Mobile Ad Hoc Networking and Computing, pp. 177-188, 2003.

[9] Stann, F., and Heidemann, J., "RMST: Reliable Data Transport in Sensor Networks", Proceedings of International Workshop on Sensor Network Protocols and Applications, pp. 102-112, 2003.

[10] Shaikh, F.K., Khelil, A., Ayari, B., Szczytowski, P., and Suri, N., "Generic Information Transport for Wireless Sensor Networks", Proceedings of IEEE International Conference on SUTC, pp. 27-34, 2010.

[11] Suri, N., Shaikh, F.K., Khelil, A., and Ali, A., "TRCCIT: Tunable Reliability with Congestion Control for Information Transport in Wireless Sensor Networks", Proceedings of International Conference on WICON, pp. 1-9, 2010.

[12] Wan, C., Campbell, A.T., and Krishnamurthy, L., "PSFQ: A Reliable Transport Protocol for Wireless Sensor Networks", Proceedings of International Workshop on Wireless Sensor Networks and Applications, pp. 1-11, 2002.

[13] Wang, C., Daneshmand, M., Li, B., and Sohraby, K., "A Survey of Transport Protocols for WSNs", IEEE Network Magazine, Special Issue on Wireless Sensor Networking, Volume 20, No. 3, pp. 34-40, 2006.

[14] Zhang, H., Arora, A., Choi, Y., and Gouda, M.G., Reliable Bursty Convergecast in Wireless Sensor Networks", Proceedings of Interational Symposium on Mobile Ad Hoc Networking and Computing, pp. 266-276, 2005.

[15] Zhou, Y., and Lyu, M.R., "PORT: A Price-Oriented Reliable Transport Protocol for Wireless Sensor Networks", Proceedings of International Symposium on Software Reliability Engineering, pp. 117-126, 2005.

[16] Sankarasubramaniam, Y., Akan, O¨.B., and Akyildiz, I.F., "ESRT: Event-to-Sink Reliable Transport in Wireless Sensor Networks", Proceedings of Interational Symposium on Mobile Ad Hoc Networking and Computing, pp. 177-188, 2003.

[17] Zhang, H., Arora, A., Choi, Y., and Gouda, M.G., "Reliable Bursty Convergecast in Wireless Sensor Networks", Proceedings of Interational Symposium on Mobile Ad Hoc Networking and Computing, pp. 266-276, 2005.

[18] Texan, N., Cayirci, E., and Caglayan, M.U., "End-to-End Reliable Event Transfer in Wireless Sensor Networks", Proceedings of Personal Indoor and Mobile Radio Communications, Volume 2, pp. 989-994, 2004.

[19] Shaikh, F.K., Khelil, A., and Suri, N., "A Comparative Study for Data Transport Protocols for WSN", Proceedings of IEEE International Symposium on a World of Wireless, Mobile and Multimedia Networks, pp. 1-9, 2008.

[20] Rosberg, Z., Liu, R., Dinh, T., Dong, Y., and Jha, S., "Statistical Reliability for Energy Efficient Data Transport in WSN", Wireless Networks, Volume 16, No. 7, pp. 1913-1927, 2010.

[21] Lea, T., Hub, W., Corkeb, P., and Jhaa, S., "ERTP: Energy Efficient and Reliable Transport Protocol for Data Streaming in WSNs", Computer Communications, Volume 32, No. 7-10, pp. 1154-1171, 2009.

[22] Levis, P., Lee, N.,Welsh, M., and Culler, D., "TOSSIM: Accurate and Scalable Simulation of Entire Tinyos Applications", Proceedings of the International Conference on Embedded Networked Sensor Systems, pp. 126-137, 2003.

[23] Choi, Y., Gouda, M.G., Zhang, H., and Arora, A., "Stabilization of Grid Routing in Sensor Networks", Journal of Aerospace Computing, Information and Communication, Volume 3, pp. 214-233, 2006.